radino 32 SX1272

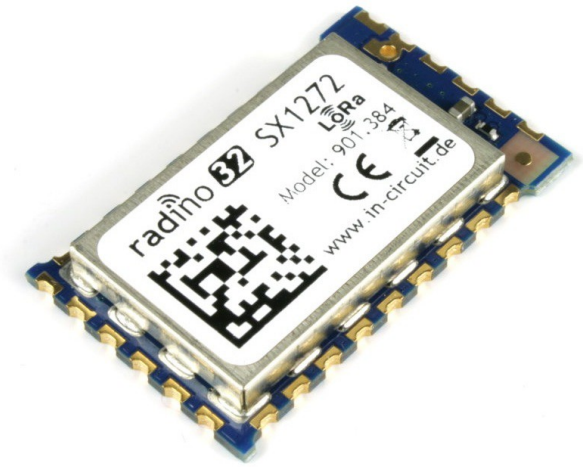

The In-Circuit radino 32 SX1272 combines an **STM32L1** with the **SX1272** RF Transceiver in a small form-factor **EMC-compliant** module.

It's part of the radino-series, which provides full-Arduino-compatible wireless communication devices in a small form factor, all **pin-compatible** to each other.

Features

- Arduino-compatible
- RF Transceiver SX1272 connected internally
  http://www.semtech.com/images/datasheet/sx1272.pdf
- Available for 868MHz /915MHz
- STM32L151CC by STMicroelectronics with 32-bit ARM® Cortex®-M3 CPU
- 256 kbyte Flash, 32 kbyte RAM, 8 kbyte EEPROM
- Low Power RTC
- 12 bit ADC and DAC
- 23 multifunctional GPIOs (14 PWM, 10 ADC IN, 1 DAC OUT)
- USB, I²C, SPI, 2xUSART

Applications

- Ultra low power wireless applications operating in the 868/915 MHz ISM/SRD bands
- Automated Meter Reading
- Home and Building Automation
- Wireless Alarm and Security Systems
- Industrial Monitoring and Control
- Long range Irrigation Systems

For more information visit:
http://www.in-circuit.de/
http://www.radino.cc/

Overview

The In-Circuit radino 32 SX1272 combines an STM32L151 with the SX1272 RF Transceiver. Despite its small form factor, the radino 32 SX1272 offers great connectivity. Many GPIOs and interfaces (USB, I²C, SPI, 2xUSART) of the STM32L151 can be connected to external circuitry.

With our Arduino Library the radino 32 SX1272 becomes fully Arduino-compatible, which enables easy programming, using the Arduino IDE (http://www.arduino.cc/).

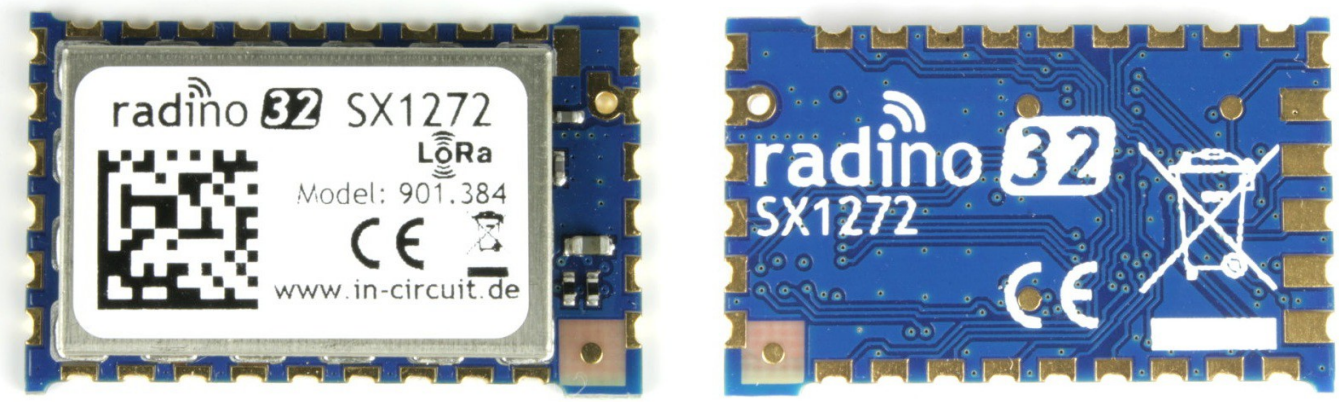

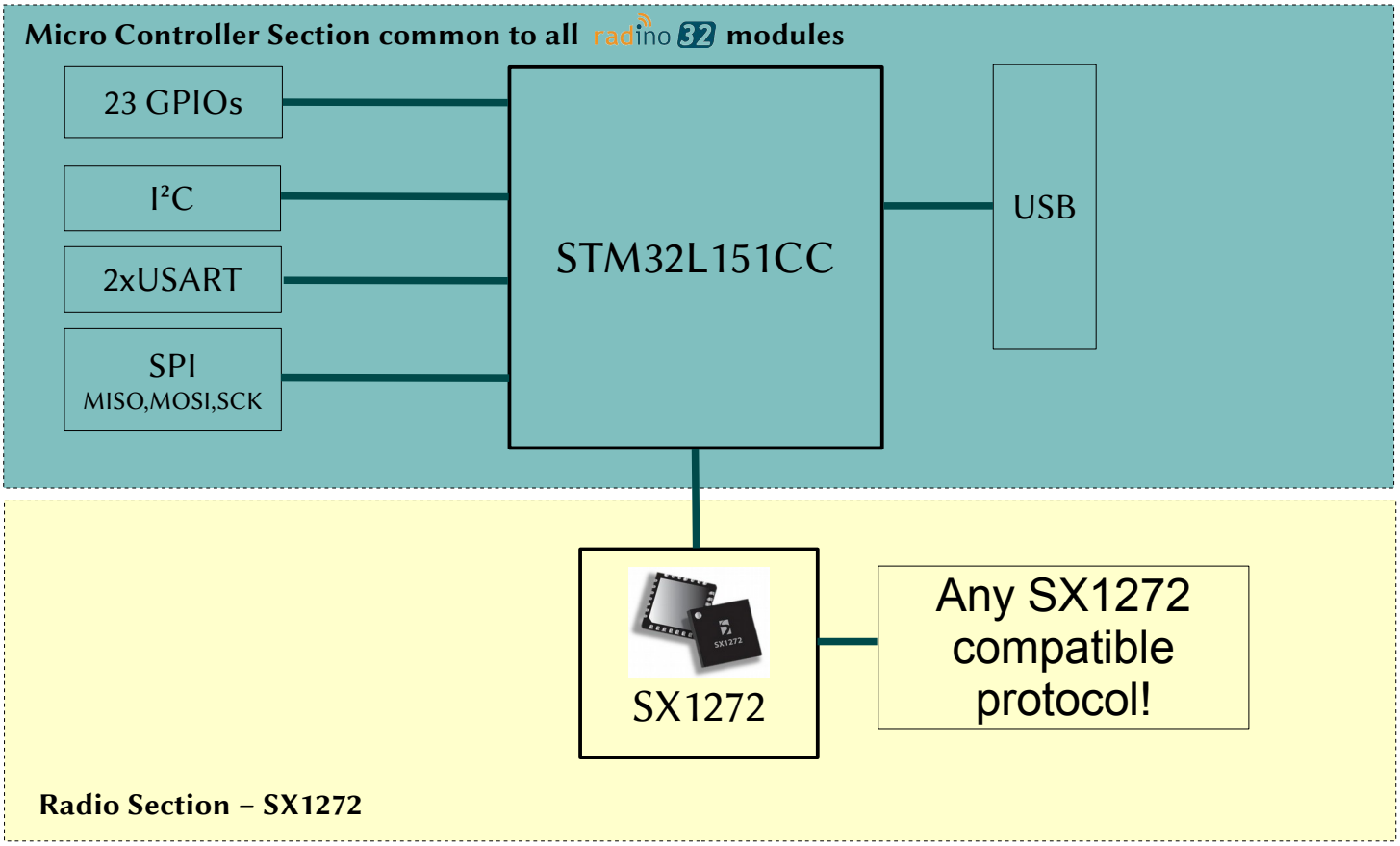

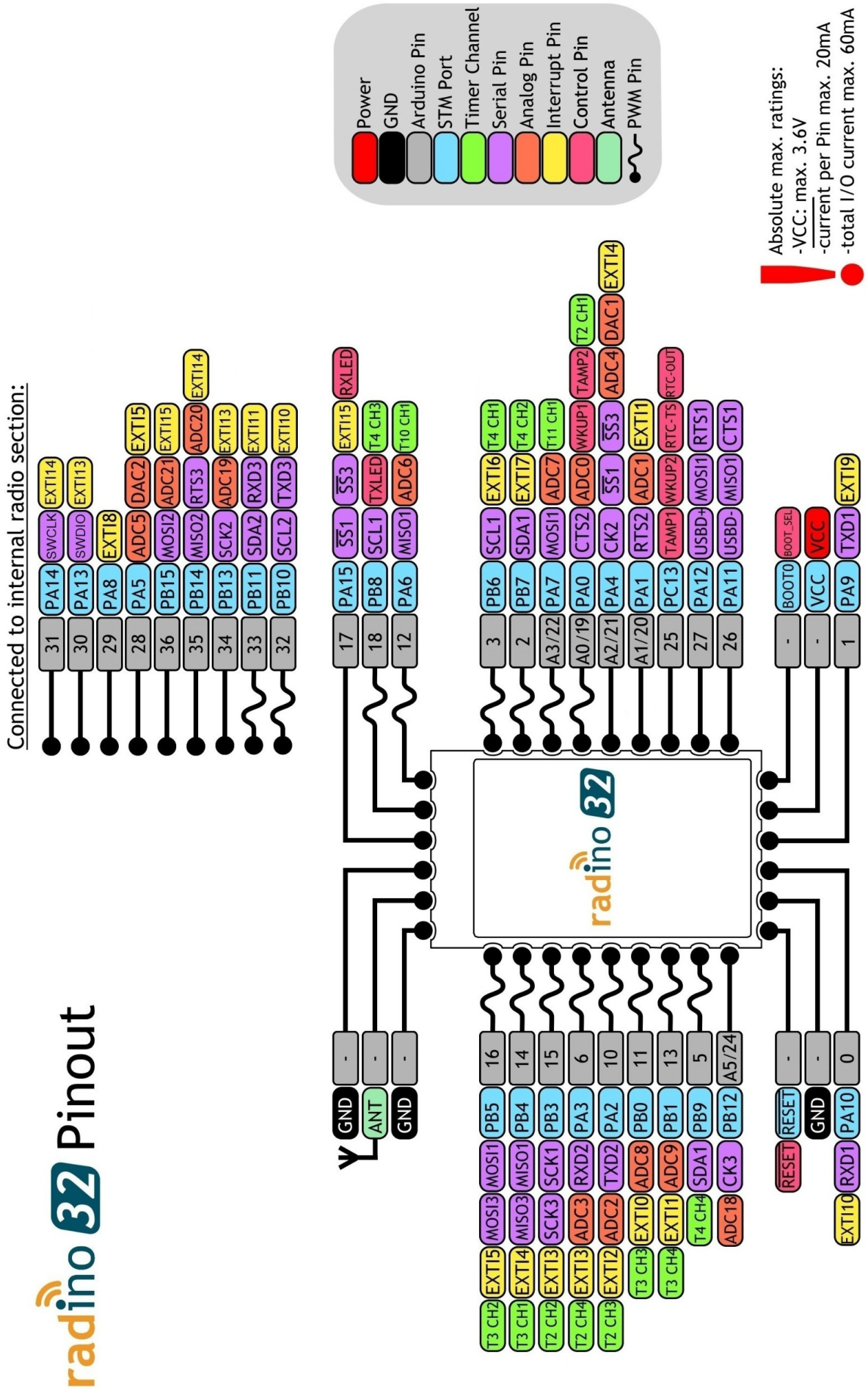
radino 32 Pinout
Connected to internal radio section:
31 PA14 SWCLK EXTI14
30 PA13 SWDIO EXTI13
29 PA8 EXTI8
28 PA5 ADC5 DAC2 EXTI5
36 PB15 MOSI2 ADC2 EXTI15
35 PB14 MISO2 RTS3 ADC20 EXTI14
34 PB13 SCK2 ADC19 EXTI13
33 PB11 SDA2 RXD3 EXTI11
32 PB10 SCL2 TXD3 EXTI10
17 PA15 SS1 SS3 EXTI15 RXLED
18 PB8 SCL1 TXLED T4 CH3
12 PA6 MISO1 ADC6 T10 CH1
3 PB6 SCL1 EXTI6 T4 CH1
2 PB7 SDA1 EXTI7 T4 CH2
A3/22 PA7 MOSI1 ADC7 T11 CH1
A0/19 PA0 CTS2 ADC0 WKUP1 TAMP2 T2 CH1
A2/21 PA4 CK2 SS1 SS3 ADC4 DAC1 EXTI4
A1/20 PA1 RTS2 ADC1 EXTI1
25 PC13 TAMP1 WKUP2 RTC-TS RTC-OUT
27 PA12 USBD+ MOSI1 RTS1
26 PA11 USBD- MISO1 CTS1
- BOOT0 BOOT_SEL
- VCC VCC
1 PA9 TXD1 EXTI9
16 PB5 MOSI1 MOSI3 EXTI5 T3 CH2
14 PB4 MISO1 MISO3 EXTI4 T3 CH1
15 PB3 SCK1 SCK3 EXTI3 T2 CH2
6 PA3 RXD2 ADC3 EXTI3 T2 CH4
10 PA2 TXD2 ADC2 EXTI2 T2 CH3
11 PB0 ADC8 EXTI0 T3 CH3
13 PB1 ADC9 EXTI1 T3 CH4
5 PB9 SDA1 T4 CH4
A5/24 PB12 CK3 ADC18
- RESET RESET
- GND GND
0 PA10 RXD1 EXTI10
- GND GND
- ANT ANT
- GND GND
Power
GND
Arduino Pin
STM Port
Timer Channel
Serial Pin
Analog Pin
Interrupt Pin
Control Pin
Antenna
PWM Pin
Absolute max. ratings:
-VCC: max. 3.6V
-current per Pin max. 20mA
-total I/O current max. 60mA

Pinout and Terminal Description

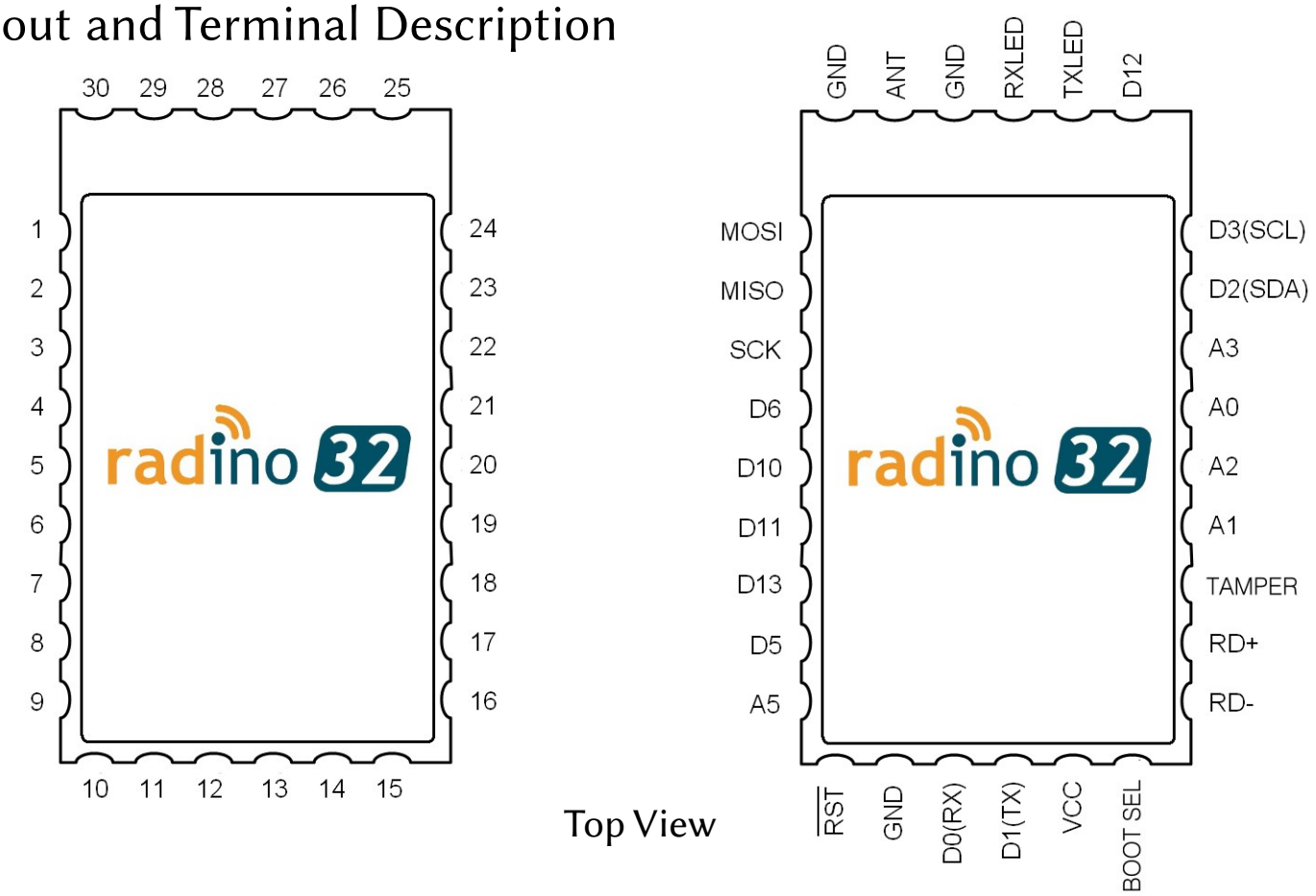

Top View

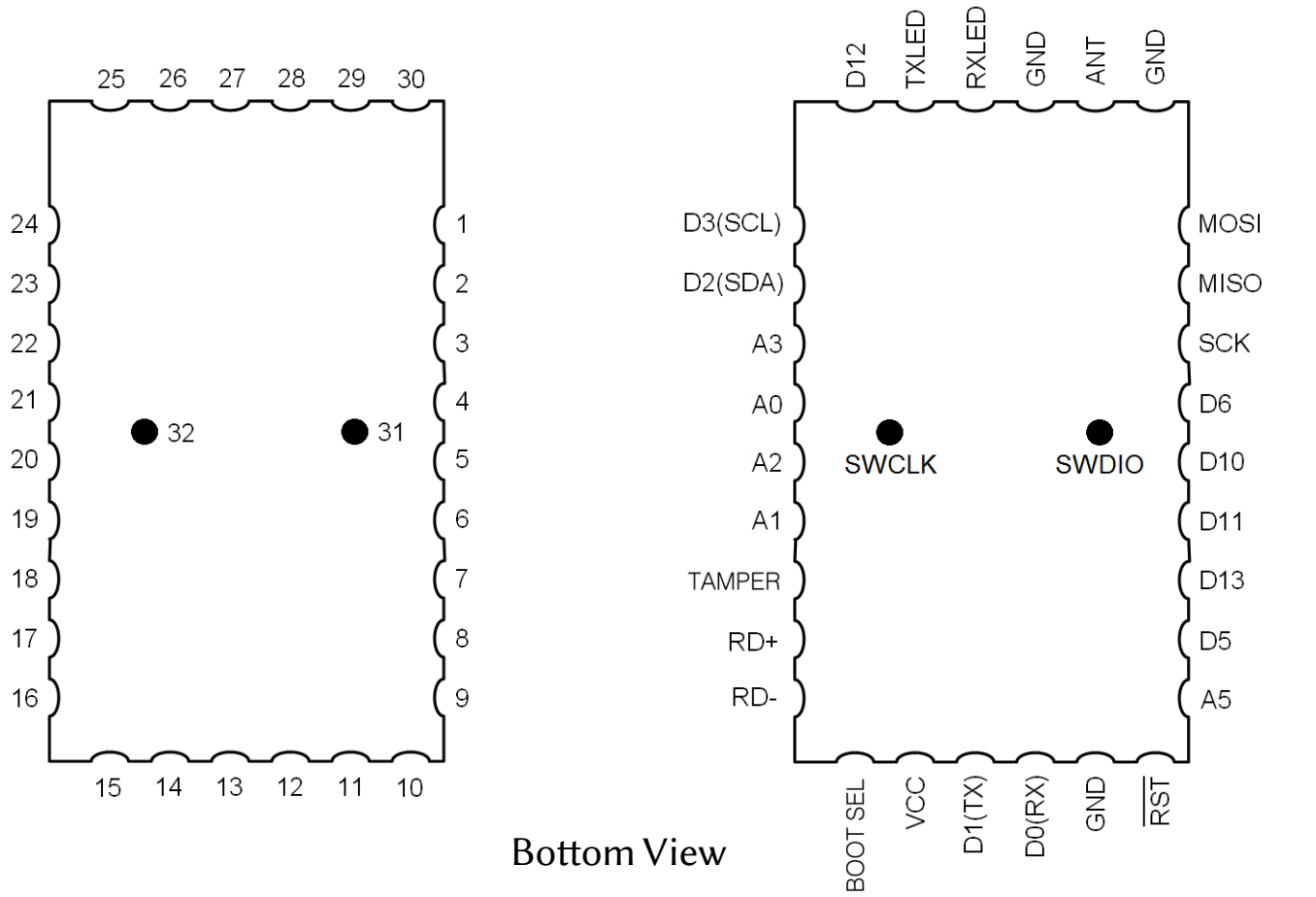

Bottom View

radino Pin No.	Name	Arduino Pin No.	STM32L151 CC Port	Description / Function (bold = main function)
1	MOSI	16	PB5	**SPI1-MOSI** SPI3-MOSI; I2C1-SMBA; PWM; TIM3-CH2; EXTI5; GPIO
2	MISO	14	PB4	**SPI1-MISO** SPI3-MISO; PWM; TIM3-CH1; EXTI4(shared with P20); GPIO
3	SCK	15	PB3	**SPI1-SCK** SPI3-SCK; PWM; TIM2-CH2; EXTI3 (shared with P4); GPIO
4	D6	6	PA3	GPIO; USART2-RX PWM; TIM2-CH4; ADC3; OPAMP1-VOUT; EXTI3 (shared with P3)
5	D10	10	PA2	GPIO; USART2-TX; PWM; TIM2-CH3; ADC2; OPAMP1-VINM; EXTI2
6	D11	11	PB0	GPIO; PWM; TIM3-CH3; ADC8; OAMP2-VOUT; EXTI0
7	D13	13	PB1	GPIO; PWM; TIM3-CH4; ADC9; EXTI1 (shared with P19)
8	D5	5	PB9	GPIO; I2C-SDA; PWM; TIM4-CH4;
9	A5	A5 24	PB12	ADC18; USART3-CK; SPI2-NSS; GPIO;
10	$\overline{\text{Reset}}$	-	NRST	Reset of STM32L151CC
11	GND	-	VSS	Ground
12	D0(RX)	0	PA10	**USART1-RX;** EXTI10; GPIO
13	D1(TX)	1	PA9	**USART1-TX;** EXTI9; GPIO
14	V_{CC}	-	VCC	Power supply
15	BOOT_SELECT	-	BOOT0	Boot Select
16	RD-	26	PA11	**USB-D-**; USART1-CTS; SPI1-MISO; GPIO
17	RD+	27	PA12	**USB-D+**; USART1-RTS; SPI1-MOSI; GPIO
18	TAMPER	25	PC13-WKUP2	RTC-TAMP1; WKUP2; RTC-TS; RTC-OUT; GPIO
19	A1	A1 20	PA1	ADC1; USART2-RTS; OAMP1-VINP; EXTI1(shared with P7); GPIO
20	A2	A2 21	PA4	ADC4; DAC1; USART2-CK; SPI1-NSS; SPI3-NSS; EXTI4(shared with P4); GPIO
21	A0	A0 19	PA0-WKUP1	ADC0; USART2-CTS; WKUP1; RTC-TAMP2; PWM; TIM2-CH1; GPIO
22	A3	A3 22	PA7	ADC7; SPI1-MOSI; PWM; TIM11-CH1; OPAMP2-VINM; GPIO
23	D2(SDA)	2	PB7	**I2C1-SDA**; USART1-RX; PWM; TIM4-CH2; EXTI7; GPIO
24	D3(SCL)	3	PB6	**I2C1-SCL**; USART1-TX; PWM; TIM4-CH1; EXTI6; GPIO
25	D12	12	PA6	GPIO; SPI1-MISO; PWM; TIM10-CH1; OPAMP2-VINP; ADC6

radino Pin No	Name	Arduino Pin No.	STM32L151 CC Port	Description / Function (bold = main function)
26	TXLED	18	PB8	**TXLED**; I2C1-SCL; PWM; TIM4-CH3; GPIO
27	RXLED	17	PA15	**RXLED**; SPI1-NSS; SPI3-NSS; EXTI15; GPIO
28	GND	-	VSS	Ground
29	ANTENNA	-	-	Antenna pin
30	GND	-	VSS	Ground
31	SWDIO	30	PA13	SWDIO of STM32L151CC (pad on bottom)
32	SWCLK	31	PA14	SWCLK of STM32L151CC (pad on bottom)
-	RF_MISO	35	PB14	**connected to internal radio section** Signal: MISO
-	RF_MOSI	36	PB15	**connected to internal radio section** Signal: MOSI
-	RF_SCK	34	PB13	**connected to internal radio section** Signal: SCK
-	RF_$\overline{SS}$	29	PA8	**connected to internal radio section** Signal: $\overline{SS}$
-	RF_DIO0	31	PA14	**connected to internal radio section** Signal: DIO0
-	RF_DIO1	33	PB11	**connected to internal radio section** Signal: DIO1
-	RF_DIO2	30	PA13	**connected to internal radio section** Signal: DIO2
-	RF_DIO3	32	PB10	**connected to internal radio section** Signal: DIO3
-	RF_RST	28	PA5	**connected to internal radio section** Signal: RESET

Detailed Interconnection diagram

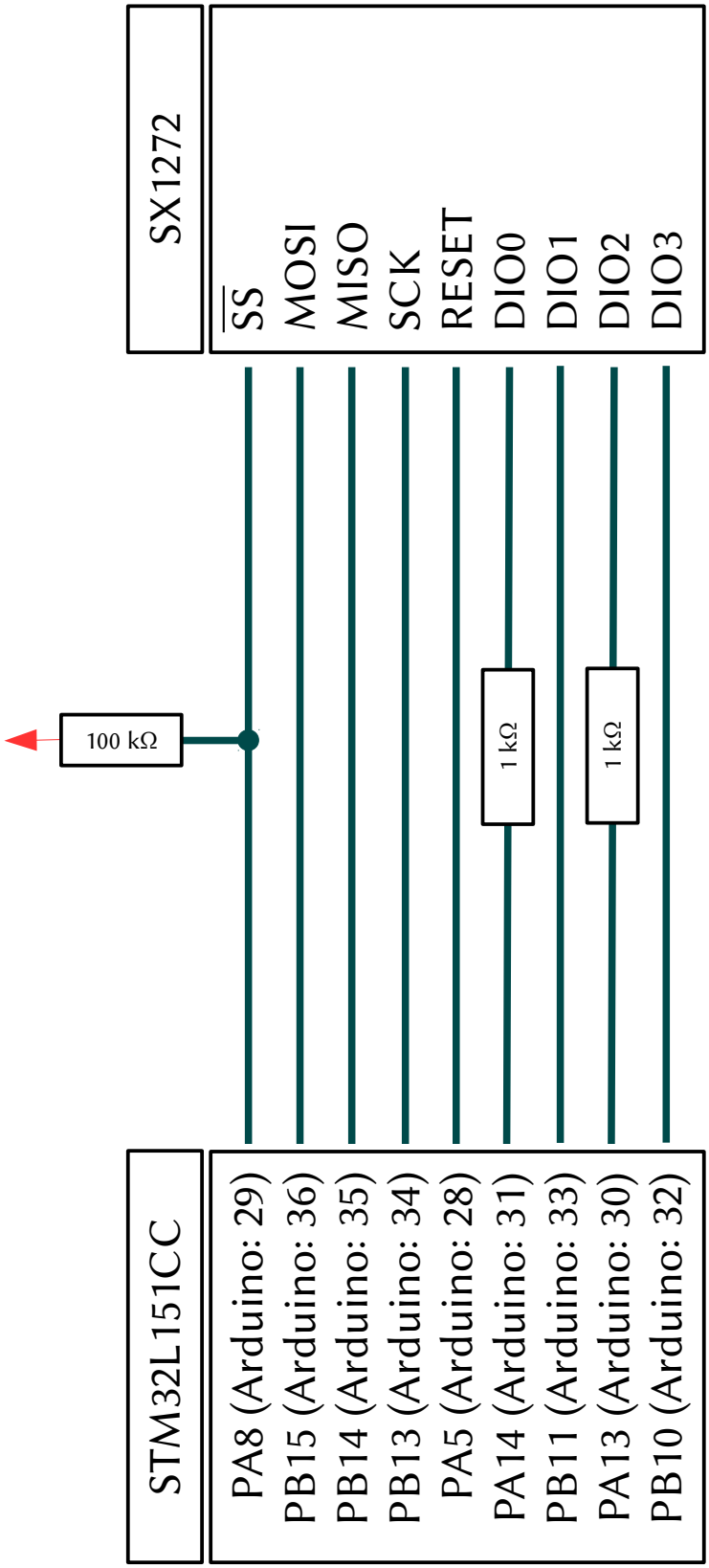

Electrical Characteristics

Absolut Maximum Ratings

Note: These are absolute maximum ratings beyond which the module can be permanently damaged. These are not maximum operating conditions.

Rating	Min	Max	Unit
Storage Temperature	−40	115	℃
V_{CC}	−0.5	3.9	V
Current per IO		20	mA
Total Current by sum of all IOs		60	mA

Recommended Operating Conditions

Environmental conditions

Rating	Min	Typ.	Max	Unit
Operating Temperature	−40		85	℃
V_{CC}	1.8	3.3	3.6	V

DC Characteristics
T_A = −40℃ to 85℃, V_{CC} = 2.7V to 3.6V (unless otherwise noted)

Symbol	Rating	Min	Typ.	Max	Unit
V_{BS}	BOOT_SELECT Voltage	0		5.5	V
V_{IL}	Input Low Voltage,	−0.3		$0.2V_{CC}$	V
V_{IH1}	Input High Voltage, Pins: P4, P6, P7, P20	$0.9V_{CC}$		V_{CC} + 0.3	V
V_{IH2}	Input High Voltage, all other Pins	$0.9V_{CC}$		5.25	V
V_{OL}	Output Low Voltage			0.5	V
V_{OH}	Output High Voltage	$0.9V_{CC}$			V

Current consumption parameters

STMicroelectronics STM32L151CC

DC Current per I/O Pin: 25 mA
DC Current over all I/O Pins: 60 mA

Operation conditions: V_{CC}=3.3V, T_A= 25℃

The STMicroelectronics STM32L151CC at radino32 works with HSE = 24 MHz.

At running mode: up to 10 mA
At stop mode: down to 1.5 µA
For details view manufacturers datasheet

Semtech SX1272

Operation conditions: V_{CC}=3.3V, T=25℃.

Symbol	Parameter	Condition	Min	Typ.	Max	Unit
IDDSL	Supply current in Sleep mode		---	0.1	1	µA
IDDIDLE	Supply current in Idle mode	RC oscillator enabled	---	1.5	---	µA
IDDST	Supply current in Standby mode	Crystal oscillator enabled	---	1.4	1.6	mA
IDDFS	Supply current in Synthesizer mode	FSRx	---	4.5	---	mA
IDDR	Supply current in Receive mode	LnaBoost Off LnaBoost On	--- ---	10.5 11.2	--- ---	mA mA
IDDT	Supply current in Transmit mode with impedance matching	RFOP = +20 dBm on PA_BOOST RFOP = +17 dBm on PA_BOOST RFOP = +13 dBm on RFO pin RFOP = + 7 dBm on RFO pin	--- --- --- ---	125 90 28 18	--- --- --- ---	mA mA mA mA
IDDR_L	Supply current in receiver LoRa™ mode	LnaBoost Off, BW = 125 kHz LnaBoost Off, BW = 250 kHz LnaBoost Off, BW = 500 kHz	--- --- ---	9.7 10.5 12	--- --- ---	mA mA mA
		LnaBoost On, BW = 125 kHz LnaBoost On, BW = 250 kHz LnaBoost On, BW = 500 kHz	--- --- ---	10.8 11.6 13	--- --- ---	mA mA mA
IDDT_L	Supply current in transmitter mode	LnaBoost On, BW = 125 kHz LnaBoost On, BW = 250 kHz LnaBoost On, BW = 500 kHz	--- ---	28 18	--- ---	mA mA

Values from manufacturers datasheet.

Package Dimensions and recommended PCB Footprint

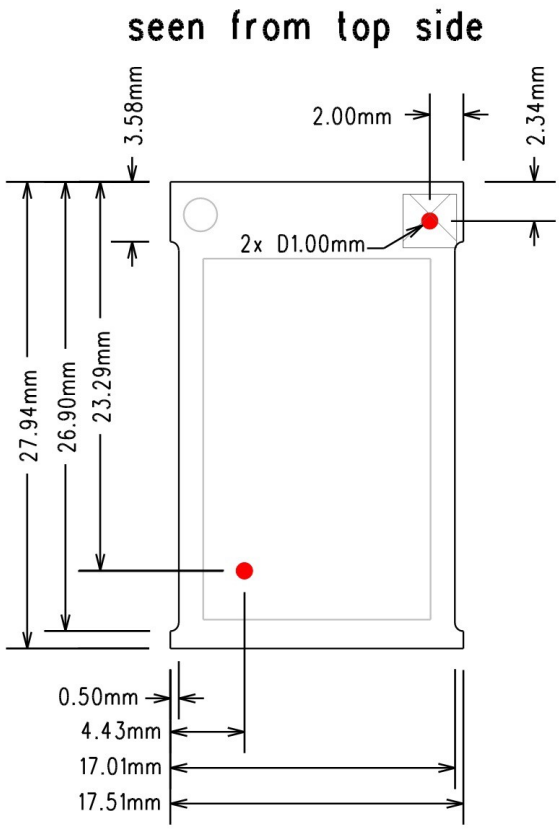

Module height: 3.7 mm ± 0.1 mm

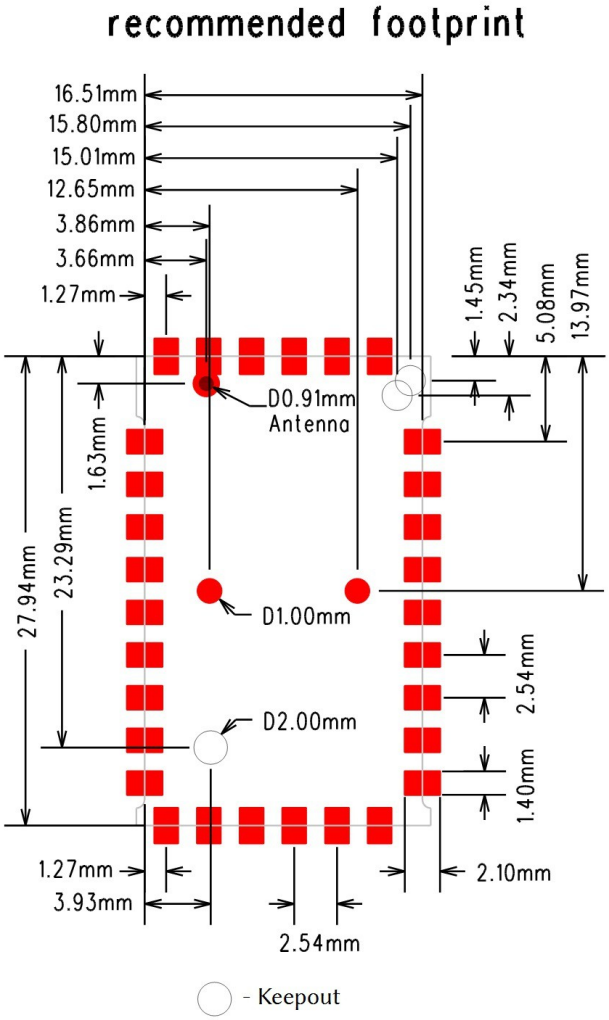

Packaging: tape & reel specification

All radino modules come in a tape & reel package suitable for pick and place machines. Small quantities are delivered as cut-tape. There are 2 kinds of reels available with 100pcs and 500pcs per reel (see section ordering information)
Except the number of modules, all parameters are same to booth reel sizes:
- 13” reel size
- 44mm tape width
- tape pocket dimensions 29mm x 19mm x 4mm
- module spacing 24mm
- 2mm hole in the middle of the module body
- 1.5mm tape holes for transport

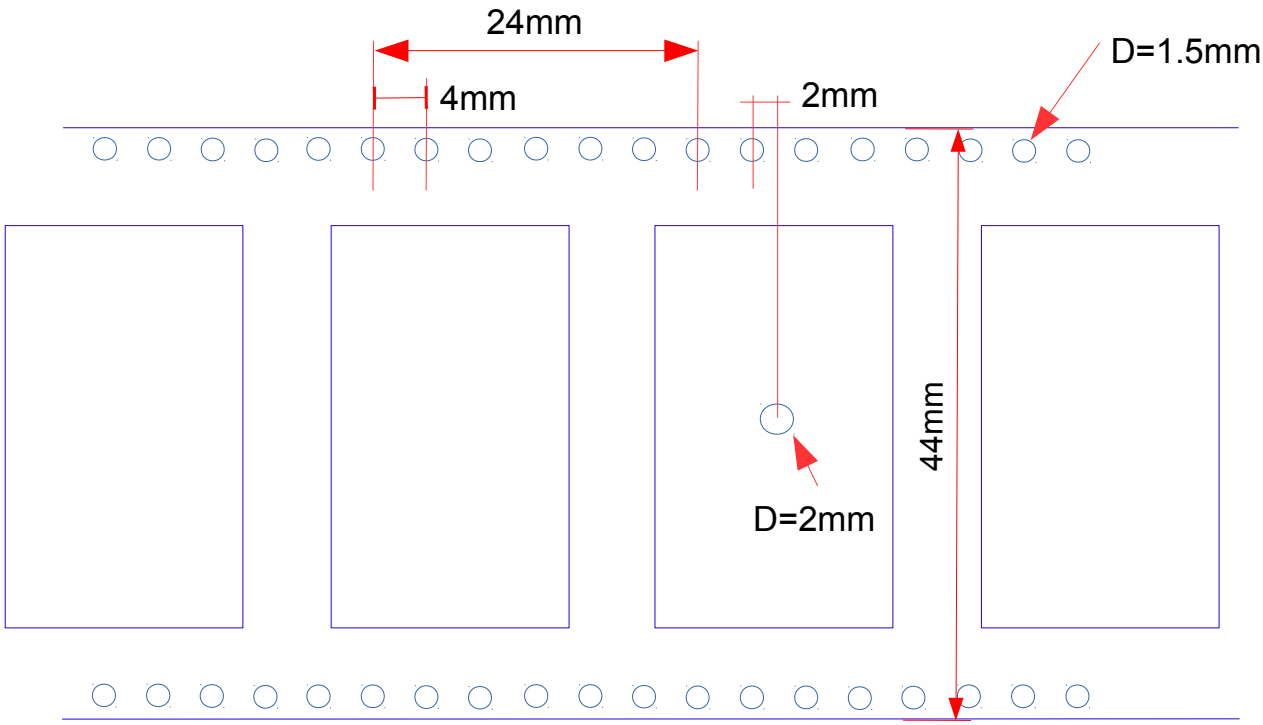

Transport direction
(Antenna connector
to the right)

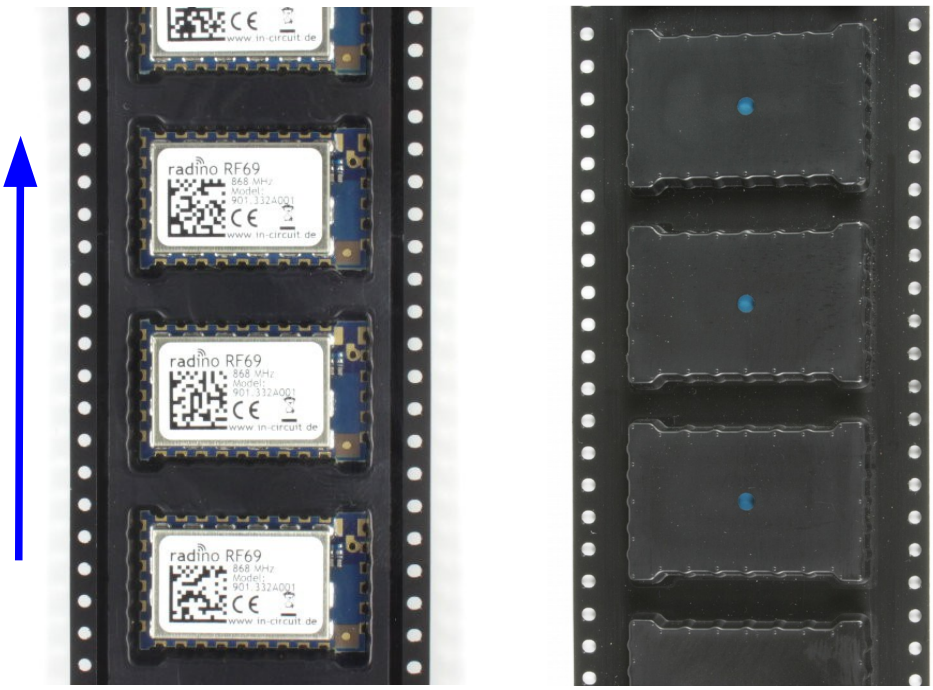

Reflow temperature profile

The single most critical stage in the automated assembly process is the reflow stage. The reflow profile shall not exceed the following maximum ratings:
- heating gradients <3℃/sec
- peak zone temperature of the module <245℃
- time in peak zone <40 sec.
- time above 220℃ <80 sec.

Excessive temperatures, transport times and shocks during the reflow process MUST not be applied to the module.

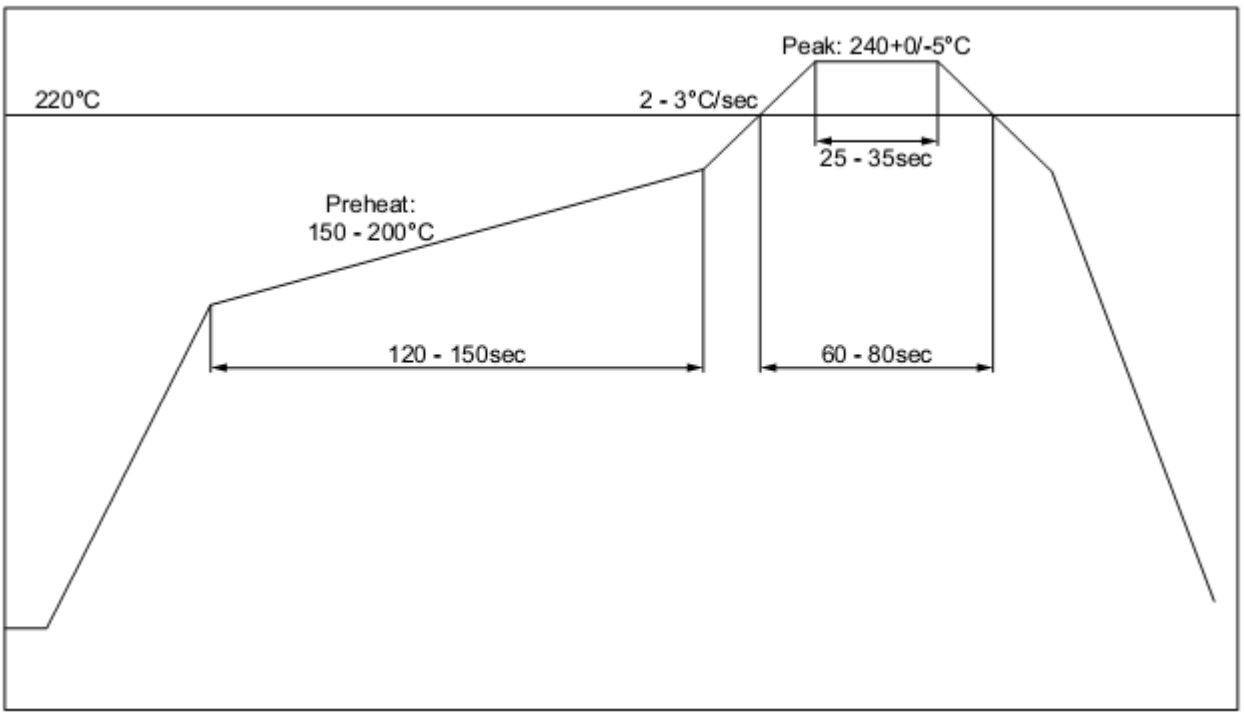

Recommended reflow temperature profile

Washability

The radino modules are wash-resistant, but are not sealed. In-Circuit recommends manufacturing without washing. If washing is needed make sure that a drying time is provided to the modules before applying electrical power. The drying time should be sufficient to allow any moisture that may have migrated into the module to evaporate, thus eliminating the potential for shorting damage during power-up or testing.
If the wash contains contaminants, the performance may be adversely affected, even after drying.

Ordering Information

Part	Ordering Code	MOQ	Package
radino32 SX1272	901.384	1	Cut Tape, Reels 100/500

All radino modules are available online: http://www.radino.cc/

Certifications

European R&TTE Directive Statements
The radino32 SX1272 module has been tested and found to comply with Annex IV of the R&TTE Directive 1999/5/EC
and is subject of a notified body opinion. The module has been approved for Antennas with gains of 2 dBi or less.

RoHS / WEEE compliant

WEEE-Reg.-Nr. DE 17225017

Revision history:

Version	Date	Changes	Editor
A	2016/08/19		Grünig
	2017/01/26	Major Update	Grünig
	2017/06/02	Update current consumption	Grünig